INSTRUCTION MANUAL

Electrophoretic Mini-Blotting Systems

Double and Triple-Wide

Cat. # EBU-302
Cat. # EBU-362
Cat. # EBU-402

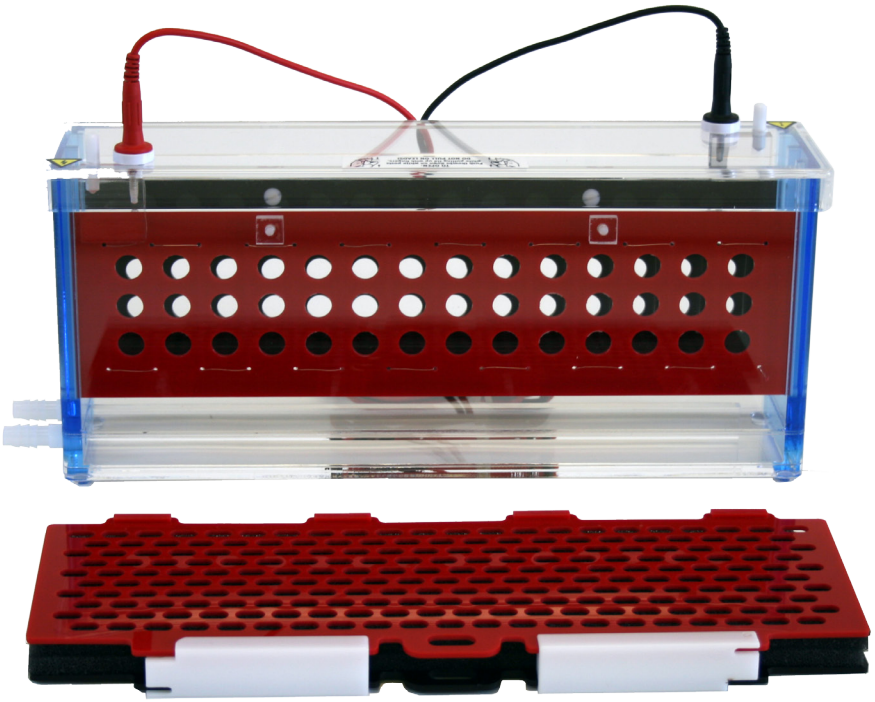

C.B.S. SCIENTIFIC
COMPANY, INC

TABLE OF CONTENTS

		Page
Important User Information		3-4
Section 1	**General Information**	
1.1	Introduction	5
1.2	Specifications	5
1.3	Safety	5
Section 2	**Description of parts**	
2.1	Unpacking	6
2.2	Components/Assembly	6
Section 3	**Instructions for Use**	
3.1	Blotting Unit Preparation	7
3.2	Preparing the Gel for Transfer	7-8
3.3	Standard Electro-Blot Transfer	9
3.4	Removing the Cassettes	9
Section 4	**Running Conditions**	
4.1	Recommended Buffers & Running Conditions	10
4.2	References	10
Section 5	**Maintenance of Equipment**	
5.1	Care and Handling	11
5.2	Maintenance	11
Section 6	**Equipment and Accessories**	12

ENGLISH

IMPORTANT USER INFORMATION

This Instruction Manual will explain how to use this product safely and effectively. Please read and carefully follow the instruction manual in its entirety.

The triangle/exclamation mark symbol alerts the user of the product to important operational, maintenance, and/or warranty requirements.

The triangle/lightning bolt symbol alerts the user of the product to potentially hazardous electrical exposure.

Failure to adhere to the instructions could result in personal and/or laboratory hazards, as well as invalidate any warranty. Always turn off the DC power source prior to disconnecting power cords from the product. Disconnect power cords from the power source first, and then from the product. For maximum safety, always operate this system in an isolated, low traffic area, not accessible to unauthorized personnel. Never operate damaged or leaking equipment.

WARRANTY AND LIABILITY

This product was produced utilizing the highest practical standards of materials, workmanship, and design. C.B.S. Scientific warrants that the product has been tested and will meet or exceed published specifications. This warranty is valid only if the product has been operated and maintained according to the instructions provided.

C.B.S. Scientific warrants this product to be free from defects in materials and workmanship under normal service for one year from date of shipment. If the product proves defective during this period, C.B.S. Scientific will repair or replace it at our option, free of charge, if returned to us postage prepaid. This warranty does not cover: damage in transit, damage caused by carelessness, misuse or neglect, normal wear through frequent use, damage caused by solvent corrosion, damage caused by improper handling or user alteration, nor unsatisfactory performance as a result of conditions beyond our control. C.B.S. Scientific shall in no event be liable for incidental nor consequential damages, including without limitation, lost profits, loss of income, loss of business opportunities, loss of use and other related damages, however caused, nor any damage arising from the incorrect use of the product.

FRANÇAIS INFORMATION IMPORTANTE À L'USAGE DES UTILISATEURS

Le présent manuel d'utilisation explique la manière de se servir efficacement du produit en conditions de sécurité. Il est recommandé de soigneusement lire la totalité du manuel, avec ses consignes et ses instructions.

Le triangle avec point d'exclamation est un symbole destiné à avertir l'utilisateur du produit de l'importance de certaines exigences relatives au fonctionnement, à l'entretien et/ou à la garantie.

Le triangle avec flèche en zigzag est un symbole destiné à avertir l'utilisateur du produit de la possibilité d'exposition à des décharges avec danger de secousses électriques.

Tout manquement à l'observation des consignes et des instructions peut exposer les personnes et les biens à des dommages corporels et/ou matériels et peut annuler toute garantie. Il faut toujours interrompre l'alimentation de courant continu avant de déconnecter les cordons d'alimentation du produit. Déconnecter d'abord les cordons d'alimentation branchés sur la source de tension (alimentation de secteur) puis ceux branchés sur le produit. Pour une sécurité maximum, il faut toujours faire fonctionner ce système dans un lieu isolé, peu fréquenté, où le personnel non autorisé n'a pas accès. Ne jamais faire fonctionner un matériel endommagé ou affecté par des fuites.

GARANTIE ET RESPONSABILITÉ

Le produit a été fabriqué conformément aux normes applicables les plus exigentes en matière de matériaux, de main d'oeuvre, de conception et d'ingéniérie. C.B.S. Scientific garantit que le produit a subi des essais et que ses performances rempliront les conditions des spécifications publiées ou leur seront même supérieures. La présente garantie n'est valide que si le produit a fonctionné et a été entretenu conformément aux consignes et instructions fournies.

C.B.S. Scientific garantit que le produit sera dépourvu de vices de matériaux et de main d'oeuvre, en conditions de service normales, pendant un an à compter de la date d'expédition. Au cas où le produit s'avérerait défectueux pendant cette période de garantie, C.B.S. Scientific réparera ou remplacera le produit, à sa discrétion et gratuitement, si le produit lui est retourné port payé d'avance. La garantie ne couvre pas les dommages de transport; les dommages causés par l'imprudence, le manque de soins, l'abus ou la négligence; l'usure normale résultant d'une utilisation fréquente; les dommages causés par la corrosion des solvants; et les dommages causés par la manipulation inadéquate ou des changements apportés par l'utilisateur. La garantie ne couvre pas non plus les performances non satisfaisantes résultant de conditions hors du contrôle de C.B.S. Scientific. C.B.S. Scientific ne pourra en aucun cas être tenue responsable de dommages indirects, y compris, de manière non limitative, la perte de bénéfices, le manque à gagner, la perte d'occasions d'affaires, l'impossibilité d'usage ou tous autres dommages associés, quelle qu'en soit la cause, ni de dommages résultant de l'usage incorrect du produit.

ESPAÑOL INFORMACIÓN IMPORTANTE PARA EL USUARIO

El presente instructivo explica la manera de usar este producto en forma segura y efectiva. Sírvase leerlo en su totalidad y seguir detenidamente las indicaciones que contiene.

El símbolo del triángulo con exclamación llama la atención del usuario a requisitos importantes para el uso y mantenimiento del producto, así como para la validez de la garantía.

El símbolo del triángulo con rayo llama la atención del usuario a la posibilidad de riesgos eléctricos.

El incumplimiento de las instrucciones aquí señaladas podría dar lugar a riesgos a la persona, al laboratorio o a ambos y podría anular toda garantía. Siempre apague la fuente de corriente continua antes de desenchufar los cables eléctricos del producto. Primero desconecte los cables de la fuente de energía y después del producto. Para mayor seguridad, siempre use este sistema en un área aislada, de poco movimiento de personas e inaccesible a personal no autorizado. Jamás use equipo que presenta algún daño o fuga.

GARANTÍA Y RESPONSABILIDAD

Este producto fue fabricado de acuerdo con las normas más estrictas que sean factibles en cuanto a materiales, mano de obra y diseño. C.B.S Scientific garantiza que se sometió el producto a pruebas y que cumplirá o excederá las especificaciones publicadas. Esta garantía será válida únicamente si se usa y se da servicio de mantenimiento al producto de acuerdo con las instrucciones señaladas.

C.B.S. Scientific garantiza que este producto se encontrará libre de defectos de materiales y mano de obra por un período de servicio normal de un año a partir de la fecha de embarque. Si el producto resulta defectuoso durante este período, C.B.S. Scientific lo reparará o lo repondrá, a criterio de C.B.S., libre de cargos, si se devuelve el producto a C.B.S. porte pagado. Esta garantía no cubre daños sufridos en tránsito, daños provocados por descuido, mal uso o negligencia, desgaste normal como consecuencia del uso excesivo, daños atribuibles a corrosión provocada por solventes, daños causados por el uso indebido o alteraciones realizadas por el usuario ni rendimiento insatisfactorio atribuible a circunstancias fuera del control de C.B.S. Scientific. C.B.S. Scientific en ningún caso asumirá responsabilidad por daños incidentales o subsecuentes, incluyendo, en forma no limitativa, la pérdida de utilidades, de ingresos, de oportunidades comerciales o del uso del producto y otros daños afines, fuere cual fuere su origen, ni por daños derivados del uso incorrecto del producto.

DEUTSCH WICHTIGE INFORMATION FÜR DEN BENUTZER

Diese Bedienungsanleitung beschreibt wie man dieses Produkt sicher und wirksam benutzt. Bitte lesen und befolgen Sie alle Anweisungen in dieser Anleitung.

Das Dreieck mit Ausrufezeichen weist den Benutzer des Produktes darauf hin, daß wichtige Bedienungs-, Wartungs- und/oder Garantievorschriften zu beachten sind.

Das Dreieck mit Zickzackblitz warnt den Benutzer des Produktes vor möglichen Gefahren durch elektrische Spannungen.

Nichtbeachtung dieser Anweisungen kann zu persönlichen und/oder labortechnischen Schäden führen und gleichzeitig alle Garantien als nichtig erklären. Die DC Stromzufuhr muß immer, vor dem Entfernen der Stromkabel vom Produkt, abgeschaltet werden. Die Stromzufuhrkabel müssen zuerst von der Steckdose und erst dann vom Produkt entfernt werden. Um höchste Sicherheit zu gewährleisten sollte dieses System in einem abgesonderten und besonders ruhigen Bereich eingesetzt werden und vor Unbefugten sicher sein.

GARANTIE UND HAFTUNG

Dieses Produkt wurde unter Anwendung von Produkten mit höchster Qualität und aus Materialien mit bester Verarbeitung und modernstem Design hergestellt. C.B.S Scientific garantiert, daß das Produkt getestet wurde und alle publizierten Spezifikationen übertrifft. Diese Garantie ist jedoch nur gültig, wenn das Produkt nach der beigefügten Bedienungsanleitung bedient und gewartet wurde.

C.B.S. Scientific garantiert, daß dieses Produkt bei normaler Bedienung aus fehlerfreiem Material besteht und fehlerfrei in der Ausführung ist. Diese Garantie gilt für ein Jahr ab Lieferdatum. Sollte das Produkt in diesem Zeiraum fehlerhaft werden, bietet C.B.S. Scientific eine kostenlose Reparatur bzw. kostenlosen Ersatz, einschließlich freiem Rückporto. Diese Garantie schließt folgendes aus: Transportschaden, Schaden durch Nachlässigkeit, Mißbrauch oder Vernachlässigung, normale Abnützung durch regelmäßigen Gebrauch, Schaden durch Säureangriff, Schaden durch falsche Handhabung, Veränderung des Produktes durch den Benutzer, oder unzureichende Leistungen die sich nicht im Verantwortungsbereich von C.B.S. Scientific befinden. C.B.S. Scientific kommt unter keinen Umständen für folgende Schäden auf: Sachschadensverlust, Einkommensverlust, Verlust von Geschäftsmöglichkeiten, Verlust der Anwendung und andere damit verbundene Schäden die auf irgend eine Art und Weise entstanden sind, oder Schäden die aus falscher Anwendung des Produktes entstanden sind.

ITALIANO INFORMAZIONI IMPORTANTI PER L'UTENTE

Questo manuale spiega come utilizzare questo prodotto in maniera sicura ed efficiente. Si pregai di leggere e seguire con cautela le istruzioni di ogni parte di questo manuale.

Il triangolo contenete il simbolo di un punto esclamativo avverte l'utente di importanti requisiti relativi al funzionamento, manutenzione e/o garanzia del prodotto.

Il triangolo contenete il simbolo di un lampo avverte l'utente del prodotto della possibilità di pericoli dovuti a corrente elettrica.

La mancata osservanza delle istruzioni può essere causa di pericolo alla propria persona ed al laboratorio, oltre a poter annullare la garanzia. Prima di distaccare il cordone d'alimentazione dal prodotto, spegnere sempre la sorgente di corrente continua. Distaccare i cordoni d'alimentazione prima dal lato della sorgente di tensione e poi dal lato del prodotto. Per maggior sicurezza, mettere sempre in funzione il prodotto in un'area isolata con poco traffico che non sia accessibile al personale non autorizzato. Non mettere mai in funzione un'apparecchiatura che sia danneggiata o abbia perdite.

GARANZIA E RESPONSABILITÀ

Questo prodotto è stato fabbricato seguendo gli standard più elevati per i materiali, la manodopera e la progettazione. La C.B.S. Scientific garantisce il prodotto è stato sottoposto a prova e raggiunge o supera i valori pubblicati per i dati tecnici. Questa garanzia è valida solo se il prodotto è messo in esercizio e soggetto a manutenzione secondo le istruzioni fornite.

La C.B.S. Scientific garantisce che questo prodotto è libero di difetti di materiali e manodopera, in normali condizioni d'esercizio, per la durata di un anno dalla data di spedizione. Se, in questo periodo, il prodotto si dimostrerà difettoso, la C.B.S. Scientific, a suo giudizio, lo riparerà o sostituirà. Questa garanzia non copre danni in transito, danni causati da negligenza, uso improprio, trascuratezza, normale consumo derivante da uso frequente, o danni causati da solventi corrosivi, danni causati da maltrattamento o da modifiche apportate dall'utente e non copre prestazioni insoddisfacenti che siano il risultato di condizioni al di fuori del controllo del fabbricante. La C.B.S. Scientific non sarà in ogni caso responsabile per danni incidentali o consequenziali, incluso, senza limitazioni, perdite di profitto, perdita di entrate, perdita di opportunità d'affari e altri danni relativi, comunque causati, e per danni risultati da uso incorretto del prodotto.

SECTION 1
General Information

1.1 Introduction

Electroblotting is a fast, easy, and efficient technique for transferring proteins from PAGE gels nitrocellulose and nucleic acids from agarose/PAGE gels onto nylon transfer membranes. The Wide Mini-Blotting Systems can effectively complete transfer in less than 2 hours compared to 6 to 24 for the more traditional “capillary” transfer. The C.B.S. Scientific Electrophoretic Blotting Systems come equipped with two electrode panels, one color-coded gel cassette assembly, holding tank with cooling chamber and exit ports and safety cover with attached power leads. The EBU-302 was designed primarily in conjunction with the Triple Wide Mini-Vertical Gel System (MGV-102/202-33), although the gel cassette will accommodate gels smaller than the set dimensions of 9cm (H) x 32.8cm (W) and can transfer up to two gels at one time. The EBU-402 was designed for use with the MGV-202-20 Double-Wide Mini-Vertical System, and can transfer two double wide gels with 20 x 10cm dimensions, or four standard mini gels.

1.2 Specifications

Constructions:

Buffer chamber, safety cover	Acrylic
Electrode panels	Acrylic and platinum wire .012" diameter
Power cords	FR Urethane rated 7500VDC @ 200mA, 65°C
Gel cassette	Perforated fiberglass panels red and black, two Scotch-Brite® pads, one sponge pad
Safety Certification	EN61010-1-1993 (IEC1010-1)

	EBU-402	EBU-302	EBU-362
Shipping Weight	**7lbs**	**9lbs**	**11lbs**
Overall Size (l)x(w)x(h) cm	**24 x 9.5 x 16**	**38 x 10 x 16**	**39 x 9 x 22**
Maximum Gel Size – cm (w) x (h)	**20 x 9**	**32.8 x 9**	**32 x 13**
Distance between electrodes –cm	**5.3cm**	**5.5cm**	**5.5cm**
Recommended buffer volume **1 cassette** **2 cassettes**	 **1.5L** **1.4L**	 **2L** **1.9L**	 **3L** **2.8L**

1.3 Safety

Power to the Electro-Blotter is to be supplied by an external DC voltage power supply that must be ground isolated so that the DC voltage output floats with respect to ground. For any power supply used, the maximum specified operating parameters for the units are:

Maximum Limits

100 VDC
150 watts power
1500mA current
50°C ambient temperature

Current to the unit, provided from the external power supply, must enter the unit through the lid assembly, providing a safety interlock to the user. Current to the unit is broken when the lid is removed. **Do not attempt to use the unit without the safety lid, and always turn the power supply off before removing the lid, or when working with the unit in any way. Follow safety precautions specified by the power supply manufacturer.**

SECTION 2
Description of Parts
2.1 Unpacking the EBU-302, EBU-402 or EBU-362

Please verify that your unit comes complete with the following components:

Blotting chamber

- Blotting cassette with sponge pads
- Safety cover with attached power leads
- 2 electrode panels
- Tubing adapters for cooling base

2.2 Components/Assembly

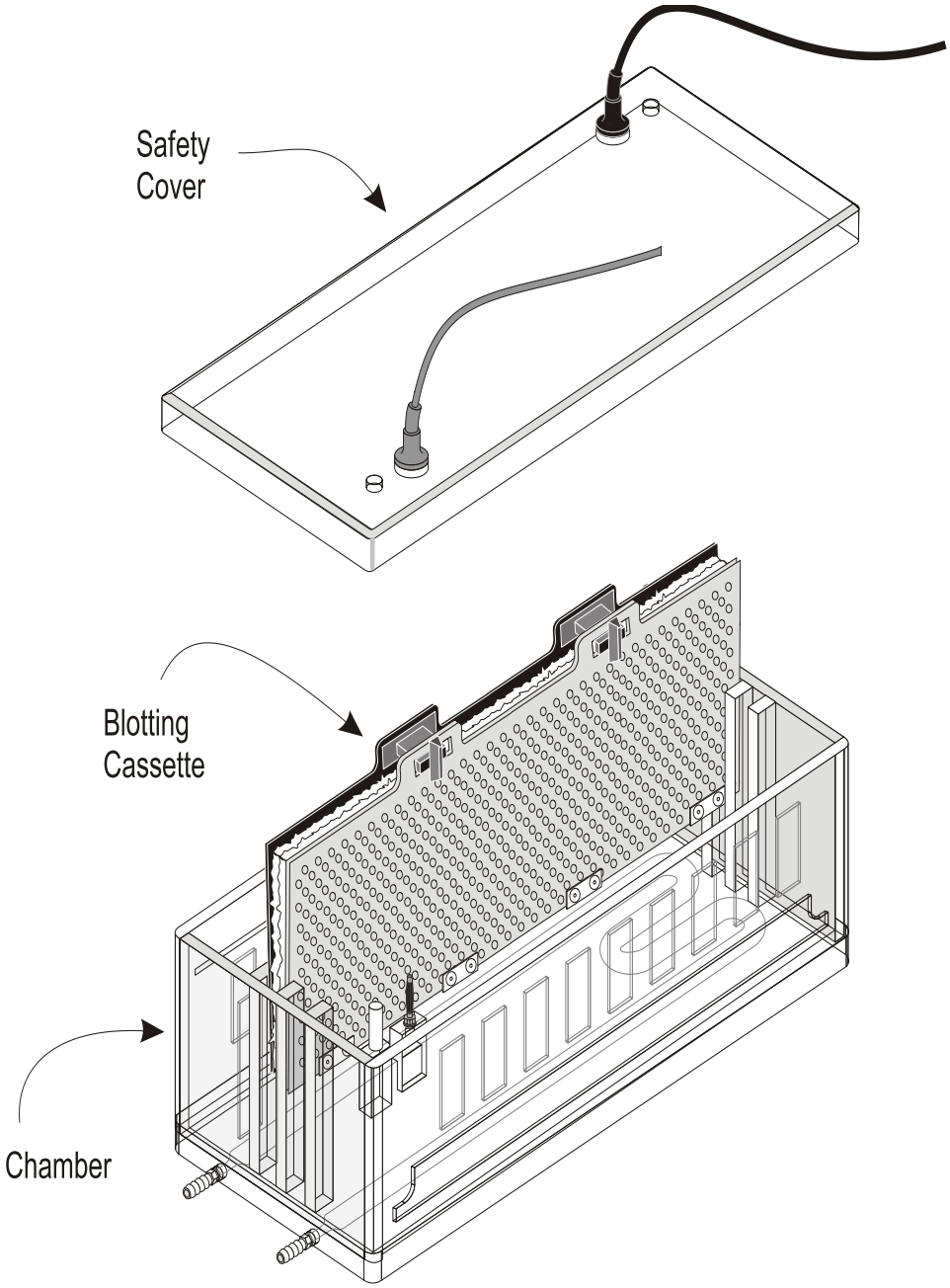

SECTION 3
Instructions for Use
3.1 Blotting Unit Preparation

1. Place the blotting chamber on a level work surface in an authorized work area.
2. Consult applications table 4.1 for type of transfer, buffer system, membrane type and power settings.

Coolant Circulation:

For coolant circulation, connect a heavy wall tubing which will not kink (hose clamps are optional), to the tubing adapters supplied with the unit (excessive pressure will damage the seal between the glass and the base and possibly create leaks). Attach a regulated pump or recirculating water bath (follow manufacturer's instructions), recommended flow is 500 ml per minute or 15psi. **Do NOT** use tap or house water as it can be subject to large fluctuations in pressure.

1. Place, do NOT drop, a magnetic spin bar (not supplied by C.B.S.) in the bottom of the tank. This maintains pH, buffer and heat circulation during the electroblot.
2. Place tank on top of the magnetic stirrer.
3. Connect to a cold water supply (see coolant circulation above).
4. Buffer should be pre-cooled to 10°C.

3.2 Preparing the Gel for Transfer

The EBU-302, EBU-402 or EBU-362 can hold up to 2 gel cassettes simultaneously with space provided for a magnetic stir bar to allow buffer circulation and heat exchange for uniform transfers. When the resolving gel electrophoresis is complete, proceed with staining and photo-documentation if applicable. Cut one corner off the gel so that correct orientation is maintained throughout the procedure.

Preparation of Electroblotting Components

1. Cut transfer membrane to size of gel or sufficient dimensions to cover the relevant bands. Also, pre-cut Whatman-type 3MM filter paper to same size and soak in transfer buffer until completely saturated (15 to 30 minutes).

2. Pre-wet membrane chosen according to manufacturer's instructions. Nylon or Nylon-supported nitrocellulose should be soaked in ddH_2O. PVDF in MeOH. Equilibrate all types in transfer buffer for 3 minutes.

3. Pre-equilibrate gel in transfer buffer to be used prior to electroblotting for 10 to 30 minutes depending on gel thickness.

4. Open the transfer cassette and submerge the red (+) panel in a shallow plastic or glass (Pyrex) dish. Fill with enough buffer to cover entire cassette. Submerge a single Sponge® pad and gently tease to release trapped air bubbles until pad is completely saturated.

5. Layer on top of the Sponge pad your transfer membrane. (Some prefer to layer 1 to 2 sheets of saturated 3mm filter paper). Carefully search for and remove trapped air bubbles at each layer by rolling a pipet over the surface.

Note: Sponge pads will degrade/compress over time. To maintain tightness in the stack, add filter paper or replace pads.

6. Apply gel correctly oriented to submerged transfer membrane. Check for air pockets and remove. Note: Some proteins will begin transfer immediately upon contracting the transfer membrane. Disturbing or moving the gel/membrane interface can result in a smeared blot.

7. Quickly follow with 1-2 sheets of saturated 3mm filter paper (optional).

8. Place second saturated Sponge pad (referenced below as Scotch Brite) over sandwich assembly and close the cassette.

Cassette Assembly

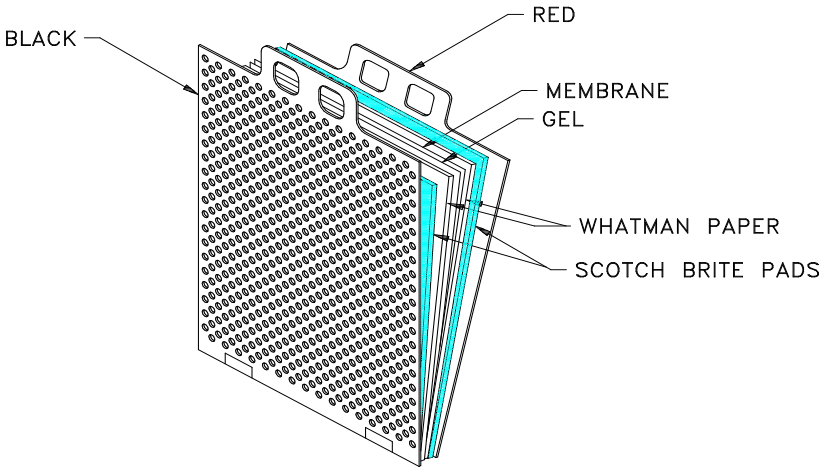

9. Remove entire assembly from pyrex dish and load into desired position (slot) in buffer chamber with black screen facing towards black terminal (cathode) and red screen facing towards red terminal (anode).

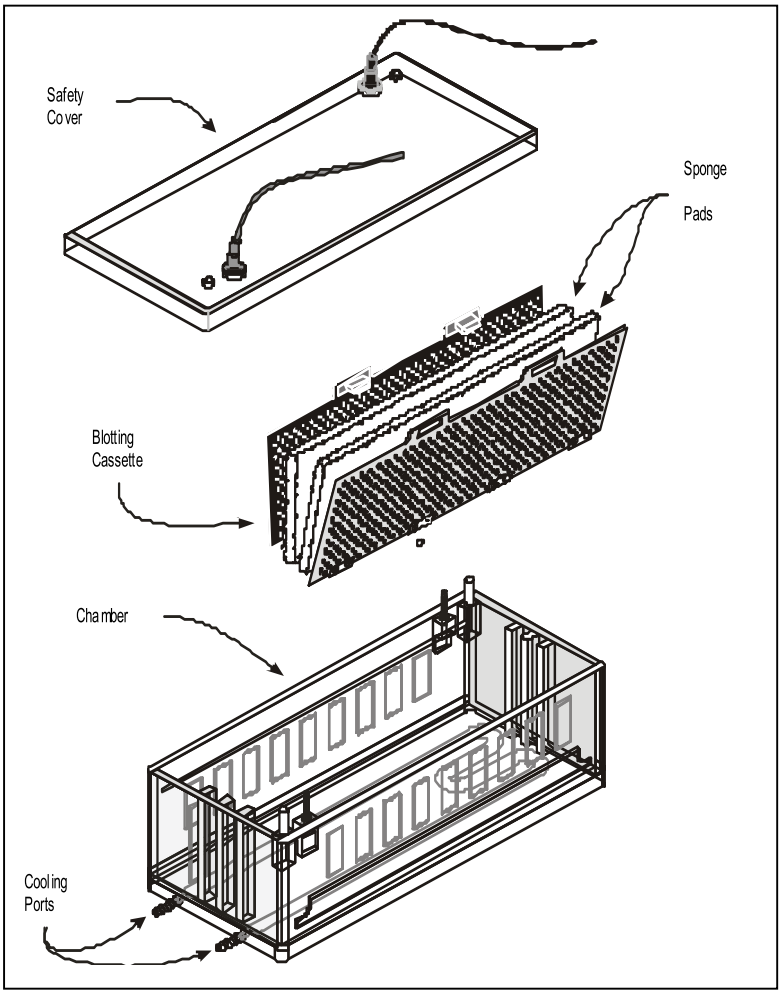

3.3 Standard Electro-Blot Transfer

1. Fill the chamber with transfer buffer. (Buffers should be prepared fresh with reagent grade chemicals and pre-cooled). The transfer buffer should be pre-cooled and added to the top of the platinum labyrinth. The buffer should not come in contact with the banana plugs when the gel cassette sandwich is immersed in the unit.

2. Align safety cover over the unit and carefully attach. Begin cycling of coolant.

3. Connect the leads to the power supply, matching the color-coded red to red and black to black. **See Section 4.1 for recommended power conditions.**

4. Transfer times will vary according to several parameters. Optimization of electro-blotting transfers must be determined empirically. Keep in mind the following principles that govern the movement of molecules of gel electrophoresis:

   -Thicker or higher percentage gels will take longer to transfer than thinner or lower percentage gels.

   -Large molecules will need extended transfer times to completely transfer.

   -Actual transfer times for defined conditions can be approximated by running molecular weight standards.

3.4 Removing the Cassettes

1. Turn the power supply off and disconnect the leads from the power supply.

2. Remove the safety cover from the unit, by placing thumbs on white posts next to red & black connectors, then pushing down while pulling up with fingers under lid**. DO NOT pull on power cords**.

3. Gently lift the cassette from the unit. **Always wear gloves, eye protection and protective clothing** if buffer and/or gel contain Ethidium Bromide. Ethidium Bromide is a powerful mutagen; gloves, eye protection and protective clothing should always be worn when handling the gel or buffer solutions**.** See Material Data Safety Sheets if using various dye solutions.

4. Mark the orientation of the membrane with a pencil or by cutting off a corner and take apart the cassette carefully.

5. Process membrane according to type of transfer and manufacturer's recommendations

SECTION 4
Applications & Running Conditions for Tank Type Electro-Blotting

4.1 Recommended Buffers, Power Settings, and Transfer Times

Precise transfer conditions will vary according to the number and type of gels used, buffer conditions employed, power input, and the general goal of the experiment. Refer to the reference section for in depth discussions on practical and theoretical approaches to gel transfers.

Using the enclosed Towbin buffer system use the following conditions at constant voltage:

For the EBU-302 and EBU-402 Blotting Systems:

At 4°C: 26V, current range: 250-300mAmp (depending on number and thickness of gels) for 18 hours. At room temperature: 26V, current range: 400-500mAmp for 18 hours

For the EBU-362 Blotting Systems:

At 4°C: 60V, current range: 100-600mAmp (depending on number and thickness of gels) for 18 hours. At room temperature: 26V, current range: 400-500mAmp for 18 hours

Towbin Buffer – 1X, 20% MeOH:
0.025M Tris Base
0.192 M Glycine
0.05-0.1%(w/v) SDS
20% (v/v) Methanol

4.2 References

1. Ausubel, F.M., Brent, R., Kingston, R.E., Moore, D.D., Seidman, J.G., Smith, J.A., Struhl, K. (ed.) (1993). *Current Protocols in Molecular Biology*. Vol. 2, Greene Publishing Associates, Inc. and John Wiley & Sons, Inc., Ch.**10**.
2. Burnette, W.N. (1981). Western blotting: Electrophoretic transfer of proteins from sodium dodecyl sulfate-polyacrylamide gels to unmodified nitrocellulose and radiographic detection with antibody and radioiodinated protein A. *Anal. Biochem.* 112:195-203.
3. Peluso, R.W. and Rosenberg, G.H. (1987). Quantitative electrotransfer of proteins from sodium dodecyl sulfate polyacrylamide gels onto positively charged nylon membranes. *Anal. Biochem.* 162:389-398.
4. Perides, G. Plagens, U., and Traub, P. (1986). Protein transfer from fixed, stained and dried polyacrylamide gels and immunoblot with protein A-gold. *Anal. Biochem.* 152:94-99.
5. Tesfaigzi, J., Smith-Harrison, W., and Carlson, D.M. (1994). A simple method for reusing western blots on PVDF membranes. *Biotechniques.* 17:268-269.
6. Towbin, H., Staehelin, T., and Gordon, J. (1979). Electrophoretic transfer of proteins from polyacrylamide gels to nitrocellulose sheets: Procedure and some applications. *Proc. Natl. Acad. Sci. U.S.A.* 76: 4350-4354.
7. Sambrook, J., Fritsch, E.F., Maniatis, T. (1989). *Molecular Cloning. A Laboratory Manual*. 2nd ed. Cold Spring Harbor Laboratory Press, Cold Spring Harbor, New York. 18.47-18.61.

SECTION 5
Maintenance of Equipment
5.1 Care and Handling

The plastic components of the Electrophoretic Blotting units are fabricated from acrylic and polycarbonate. Electrodes and connectors are made from pure platinum, stainless steel, and chrome plated brass. As with any laboratory instrument, adequate care ensures consistent and reliable performance.

After each use, rinse buffer chamber, gel tray and combs with de-ionized water. Wipe dry with a soft cloth or paper towel, or allow to air dry. Whenever necessary, all components may be washed gently with water and a non-abrasive detergent, and rinsed and dried as above. *Never* use abrasive cleaners, glass cleaning sprays or scouring pads to clean the components, as these will damage the unit and components.

Additional precautions:

- Do not autoclave or dry-heat sterilize the apparatus or components.
- Do not expose the apparatus or components to phenol, acetone, benzene, halogenated hydrocarbon solvents or alcohols.
- Avoid prolonged exposure of the apparatus or components to UV light.
- For Northern blotting, DO NOT treat with diethylpyrocarbonate (DEPC)-treated water for extended periods at 37°C.
- Electrostatic charge and heat affix the conductive platinum surface covering the titanium. It can be scratched off or damaged by using sharp objects or scouring pads. This will disturb the continuity of the electric field and have a negative effect on transfers.
- The stainless electrode can be permanently damaged by corrosion if the polarity between anode and cathode is reversed. CAUTION: Be certain of power connections before initiating transfer.

5.2 Maintenance

The following inspection and maintenance procedures will help maintain the safety and reliable performance of the Blotting systems. Replacement parts can be ordered by calling 858-755-4959 or by contacting your local distributor.

- Banana plugs and power cords should be inspected regularly. If the banana plugs become loose or do not feel friction tight replace the plugs or power cords.
- Should power cord assemblies (connectors, wire or shrouds) show any signs of wear or damage (e.g. cracks, nicks, abrasions, or melted insulation), replace them immediately.
- The platinum wire is secured to the banana jack by compression between a stainless washer and the jack nut. The nut/washer interface should be tight and free of corrosion.

SECTION 6

Equipment and Accessories

Cat. #	Item
EBU-402	**Double-Wide Mini-Blotting System**. Gel Size: 9cm x 20cm(w). Includes chamber with 2 platinum wire electrode panels, 1 color-coded gel cassette, safety cover with power leads.
EBC-402	Additional Double-Wide Gel Cassette, color coded
EBS-402	Double-Wide Sponge Pads, pkg. of 2
EBU-302	**Triple-Wide Mini-Blotting System**, **10cm(h).** Gel Size: 10cm(h) x 33 cm (w). Includes chamber with 2 platinum wire electrode panels, 1 color-coded gel cassette, safety cover with power leads.
EBC-302	Additional Gel Cassette fits EBU-302 Blotter, color coded
EBS-302	Additional Sponge Pads, pkg. of 2 for EBU-302 Blotter
EBU-362	**Triple-Wide Mini-Blotting System, 16cm(h).** Gel Size: 16cm(h) x 33cm(w). Includes chamber with 2 platinum wire electrode panels, 1 color-coded gel cassette, safety cover with power leads.
EBC-362	Additional Gel Cassette fits EBU-362 Blotter, color coded
EBS-362	Additional Sponge Pads, pkg. of 2 for EBU-362 Blotter.

Power Supply

Cat. #	Item
EPS-200 X	High Current Power Supply with timer, Universal input power supply accepts all domestic and international voltages. Input: 96-240 VAC, 50-60Hz, Output voltage 5-200V in 1 V steps, CV or CC. Output current 10-2000mA in 1mA steps, 200 Watts
EPS-300 X	Mini Power Supply with timer, Universal input power supply accepts all domestic and international voltages. Input: 96-240 VAC, 50-60Hz, Output voltage 10-300V in 1 V steps, CV or CC. Output current 4-500mA in 1mA steps, 90 Watts
EPS-600 X	Mini Power Supply with timer, Universal input power supply accepts all domestic and international voltages. Input: 96-240 VAC, 50-60Hz, Output voltage 10-600V in 1 V steps, CV or CC. Output current 4-500mA in 1mA steps, 90 Watts

Contact Information:

Telephone: 858-755-4959
Toll Free: 800-243-4959
Fax: 858-755-0733
Email: sales@cbssci.com
Mailing Address: CBS Scientific Company
P.O. Box 856
Del Mar, CA 92014
Shipping Address: CBS Scientific Company
10805 Vista Sorrento Parkway
Suite 100
San Diego, CA 92121